RAI 15

POTTERTON

EDEN

GAS-FIRED BOILERS

Instruction Manual

Installation and Maintenance Instructions

"EDEN" GAS-FIRED BOILERS

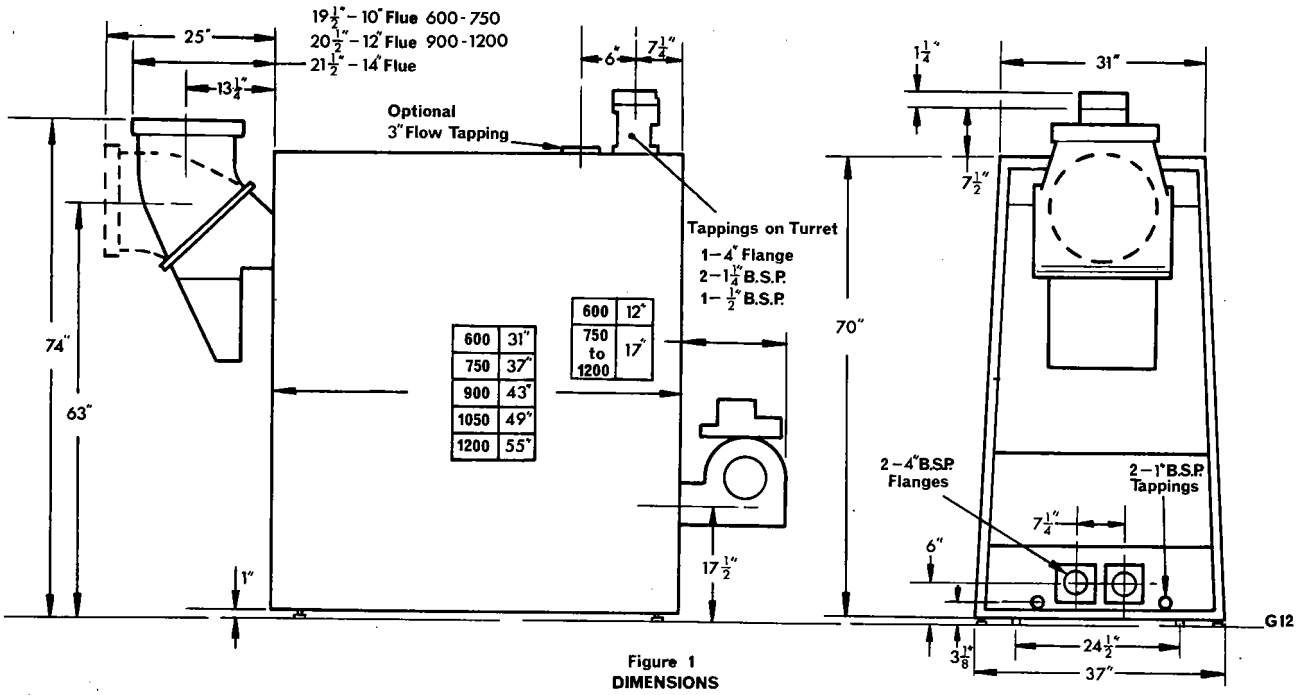

Figure 1
DIMENSIONS

Section 1

BOILER INSTALLATION

1.1 SITE REQUIREMENTS

The site chosen for the installation of the "Eden" boiler must be large enough to permit the delivery and off-loading of cast-iron waterway sections weighing approximately 5½ cwt each (maximum) and measuring approximately 70 in. x 30 in. x 6 in.

A level floor is necessary, capable of bearing the weight of the boiler being installed (see Table 1).

TABLE 1 - APPROXIMATE WEIGHT IN LB

BOILER	No. OF SECTIONS	BOILER INCLUDING BURNER	WATER	TOTAL
600	4	2623	400	3023
750	5	3370	500	3870
900	6	3992	600	4592
1050	7	4614	700	5314
1200	8	5236	800	6036

The base of the boiler is water-cooled and no insulation is necessary other than that specified by local authorities and Building Regulations 1965.

In addition, the site must provide :-

(a) Minimum clearance, in excess of overall boiler dimensions, of 2ft. 6 in. behind the rear boiler plate, 3 feet in front of the boiler and at least 18 in. at each side (note:- an extra foot is necessary on the gas supply side). These clearances are essential for erection and subsequent maintenance.

(b) An adequate flue, air supply and proper evacuation of flue products is essential. British Standards Code of Practice CP. 342 and Clean Air Act 1956 - Memorandum on Chimney Heights should be consulted and the flue designed to give a draught of 0.03 in. w.g. at the boiler flue outlet. The stabiliser fitted is capable of dealing with excess draughts of up to 0.2 in. w.g. Both flue and chimney stack must be adequately insulated although internal chimney stacks may not require insulation. There must be an air supply into the boiler house for combustion and ventilation at all times when the boiler is operating. The provision of a low level entry for the combustion air and a high level opening for ventilation is essential (see Table 2 for minimum air requirements).

TABLE 2—MINIMUM FRESH AIR REQUIREMENTS

EDEN	600	750	900	1050	1200
cfm @ stp	440	550	660	770	880
Min free air inlet sq. in.	300	375	450	525	600

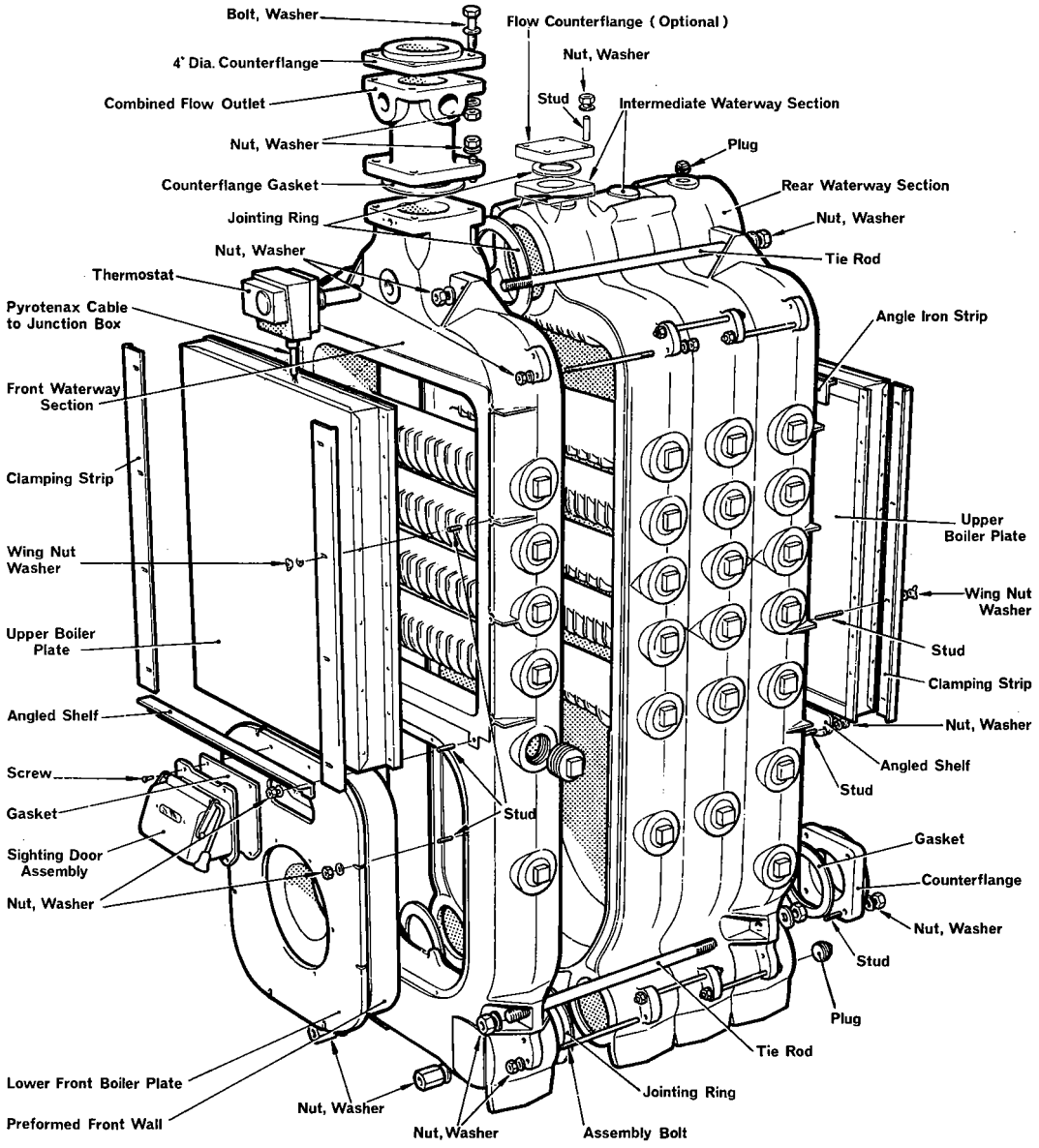

WATERWAYS AND PLATEWORK ASSEMBLY
Figure 2

1.2 ERECTION

Before erecting the boiler, check that all the parts shown on the Despatch List are available on site.

1.2.1 Identification of Sections

The front section of the boiler has the water flow flange on top and the burner aperture in front. The rear section has the water return flange facing rearwards. The lower half of the rear section forms the water-cooled back of the combustion chamber. The remaining sections are all intermediate. The cast-in arrows, adjacent to the third and fourth bosses down on each side indicate the staggering of the cross tubes (see Figure 2).

1.2.2 Erection Procedure

Erection of the boiler should be carried out as follows :-

(a) Lay the two 2 in. x $\frac{1}{4}$ in. boiler length steel strips on the base at $24\frac{1}{2}$ in. centres to form a level track for the waterway sections.

(b) Remove the protective covering from the water ports and clean each face with fine abrasive paper.

(c) Prop the rear waterway section in its working position on the track with the return flanges facing the rear. Metal shims are provided for final levelling.

(d) Apply 2 or 3 dabs of adhesive to each water port face and place a jointing ring in position on each, a $5\frac{1}{2}$ inch ring at the top and two $4\frac{1}{2}$ inch rings at the bottom. It is important that no adhesive is used on the exposed faces of the jointing rings.

(e) Prepare the first intermediate section as described in (b) and (d) and place it up against the rear section. The cast arrow next to the third boss down on the section side should point to the rear. Prop the section in position and secure to the rear section by passing a $\frac{3}{8}$ in. assembly bolt through one of the holes in each of the double-drilled lugs at the corners of the waterway sections. Use nuts and washers but only hand tighten at this stage.

(f) Check that both sections are vertical and that the waterway ports are lined up correctly. Use shims under the section feet if necessary.

(g) Fully tighten the nuts on the assembly bolts.

(h) Prepare and assemble the second intermediate section with the cast arrow on the section side facing forwards. With these three sections assembled, the unit becomes free-standing and the props can be removed.

(i) Seal the gaps across the combustion chamber wall between the sections, up to immediately above the level of the lower waterway ports, using the "Fortafix" cement supplied. Force the cement well in between the sections.

(j) The target wall consists of two halves, upper and lower with an additional rear insert. Fit the lower half against the cast-iron wall of the combustion chamber and place the rear insert on the ledge directly below the lower cross tube. Place the upper half of the target wall up against the rear insert, with the chamfered edge uppermost and facing forwards.

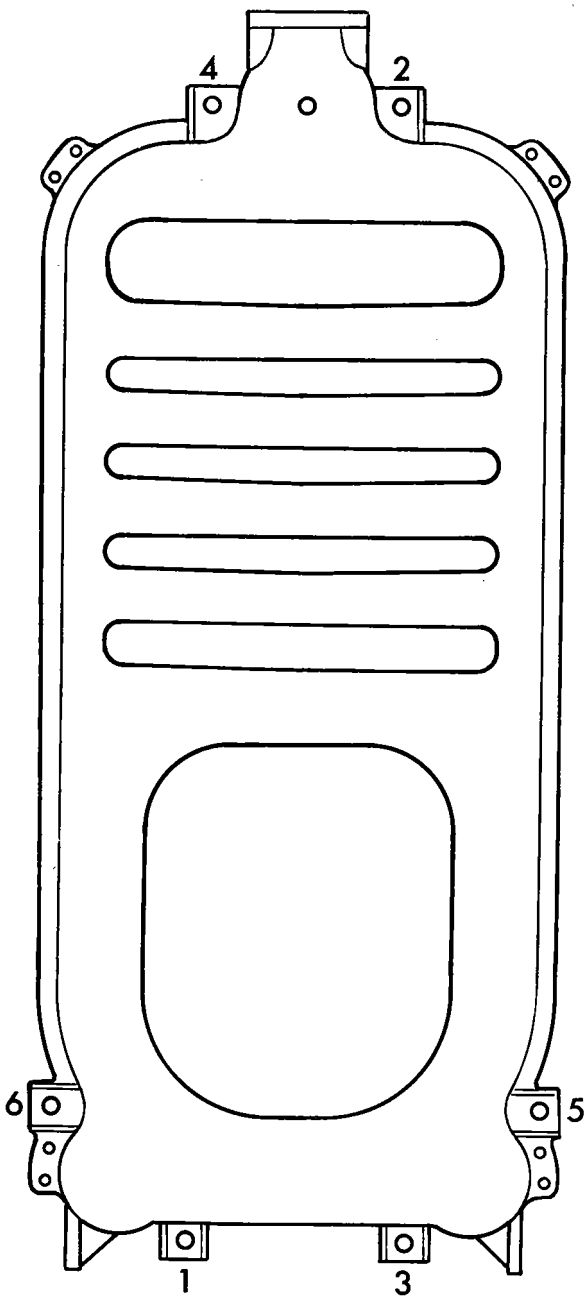

TORQUE DIAGRAM
Fig. 3

(k) Fill in the gap between the target wall and the sides of the combustion chamber with Peer "M" cement, pressing it well home.

(l) Prepare and erect the remaining sections as already described, making sure that the cast arrows next to the third boss down on the section sides point alternately to the front and rear.

(m) Take the six long tie rods. To four of these screw $\frac{3}{4}$ in. Bsw nuts and washers. To the remaining two rods screw the $\frac{3}{4}$ in. Bsw x 3in. long nuts. Place washers next to the nuts.

(n) Pass the two tie rods with the long nuts through the large lugs at the bottom of the front waterway section (located approximately 6 in. from each boiler foot).

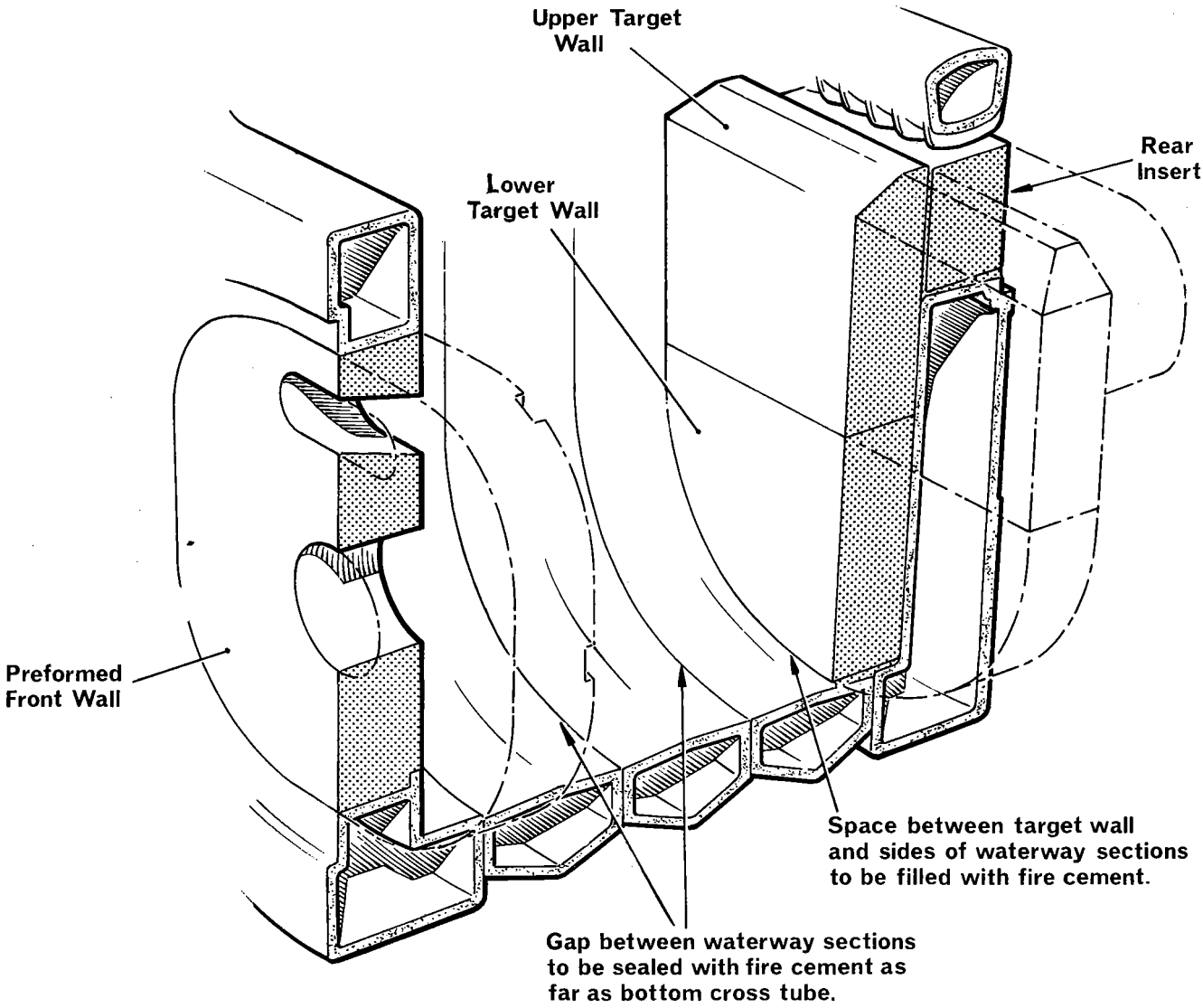

ASSEMBLY OF FRONT AND REAR WALLS
Figure 4

Similarly, pass two of the remaining tie rods through the large lugs approximately 8in. from the floor on each side of the boiler and the final two tie rods through the lugs on each side of the boiler next to the flow ports at the top.

(o) Place $\frac{3}{4}$ in. Bsw nuts and washers on the rear ends of the tie rods and tighten progressively diagonally, using a torque spanner. Starting at 50-60 lb/ft., pull up in 20 lb/ft stages to a final torque of 90 - 100 lb/ft., on each tie rod.

(p) Fit the combined flow outlet on top of the front waterway section making sure that the counterflange gasket is in position as shown in Figure 2.

Secure with the nuts, bolts and washers supplied.

(q) Fit the thermostat pocket into the $\frac{3}{8}$ in. Bsp tapping in the front section immediately below the combined flow outlet. Do not overtighten.

(r) Fit a 1 in. Bsp drain cock into one of the two tappings at the bottom of the rear section. The unused tapping should be plugged.

(s) The boiler is now ready for testing for leaks and the method adopted should be the one most convenient to the situation e.g. if the water system is ready for connection, marry up both the flow and return flanges. Fill the boiler by the main stop valves and connect a pressure pump to the boiler side of these. Alternatively, fit temporary flanges on the flow and return, two blanks for the returns and one tapped 1 in. Bsp and valved for venting on the combined flow outlet. The remaining outlet and tappings should be plugged, and the boiler filled through the drain cock. The applied test pressure for the assembled boiler should be one and half times the working head of the installation plus 20 lb/sq. in., if the working pressure is above 40 lb/sq. in., or twice the working pressure if this is below 40 lb/sq. in., (see British Standards Code of Practice CP. 341. 300). The normal working head of the installation should not exceed 140 ft (60 lb/sq. in).

(t) Check the boiler for leaks.

(u) Seal between the waterway sections externally, down each side from the top waterway port to the bottom using "Forta-fix" sealing compound supplied.

1.2.3 Studding

The boiler platework and fluehood assembly are secured to the boiler with threaded studs. The short thread of each stud is screwed into the appropriate tapping on the boiler and the arrangement of the studs is as follows:-

Front	
Flueway sides	Eight $\frac{3}{8}$in. Bsw studs $1\frac{1}{2}$ in. long. (four on each side)
Flueway bottom	Two $\frac{3}{8}$in. Bsw studs 1 in. long
Combustion chamber	Eight $\frac{3}{8}$in. Bsw studs $1\frac{1}{2}$ in. long.
Rear	
Flueway sides	Sixteen $\frac{3}{8}$in. Bsw studs $1\frac{1}{2}$in. long. (four on each side and eight at the top).
Flueway bottom	Three $\frac{3}{8}$in.Bsw studs $1\frac{1}{2}$ in. long.
Flue offtake outlet flange.	Twelve $\frac{3}{8}$in. Bsw studs $1\frac{1}{2}$ in. long.
Draught Stabiliser	Four $\frac{1}{4}$in. Bsw studs $1\frac{1}{4}$ in. long.

1.2.4 Fluehood

Attach the angle iron strip to the inside of the flue offtake with four $\frac{1}{4}$ in. Bsw round head screws $\frac{3}{8}$ in. long and washers to form a continuation of the flange on the outside. Place the offtake over the studs on the rear section and check that the face of the angle iron lines up with the rear face of the section. After making the necessary adjustments, secure with eight $\frac{3}{8}$ in. Bsw nuts and washers. Seal around the gap with asbestos string and boiler sealing compound.

Fit the flue adaptor. This can be fitted to provide a horizontal or vertical fluepipe connection. Place four preformed asbestos strips over the studs on the flue offtake. Position the adaptor and secure with twelve $\frac{3}{8}$ in. Bsw nuts and washers.

Fit the stabiliser housing to the boiler flue offtake using four $\frac{1}{4}$ in. Bsw studs $1\frac{1}{4}$ in. long with washers and nuts. When fitted, the opening should be facing the boiler. Fit the stabiliser flap into the V-shaped lugs at each side of the stabiliser housing.

1.2.5 Platework

Fit the angled shelf across the rear waterway section, immediately below the flueway

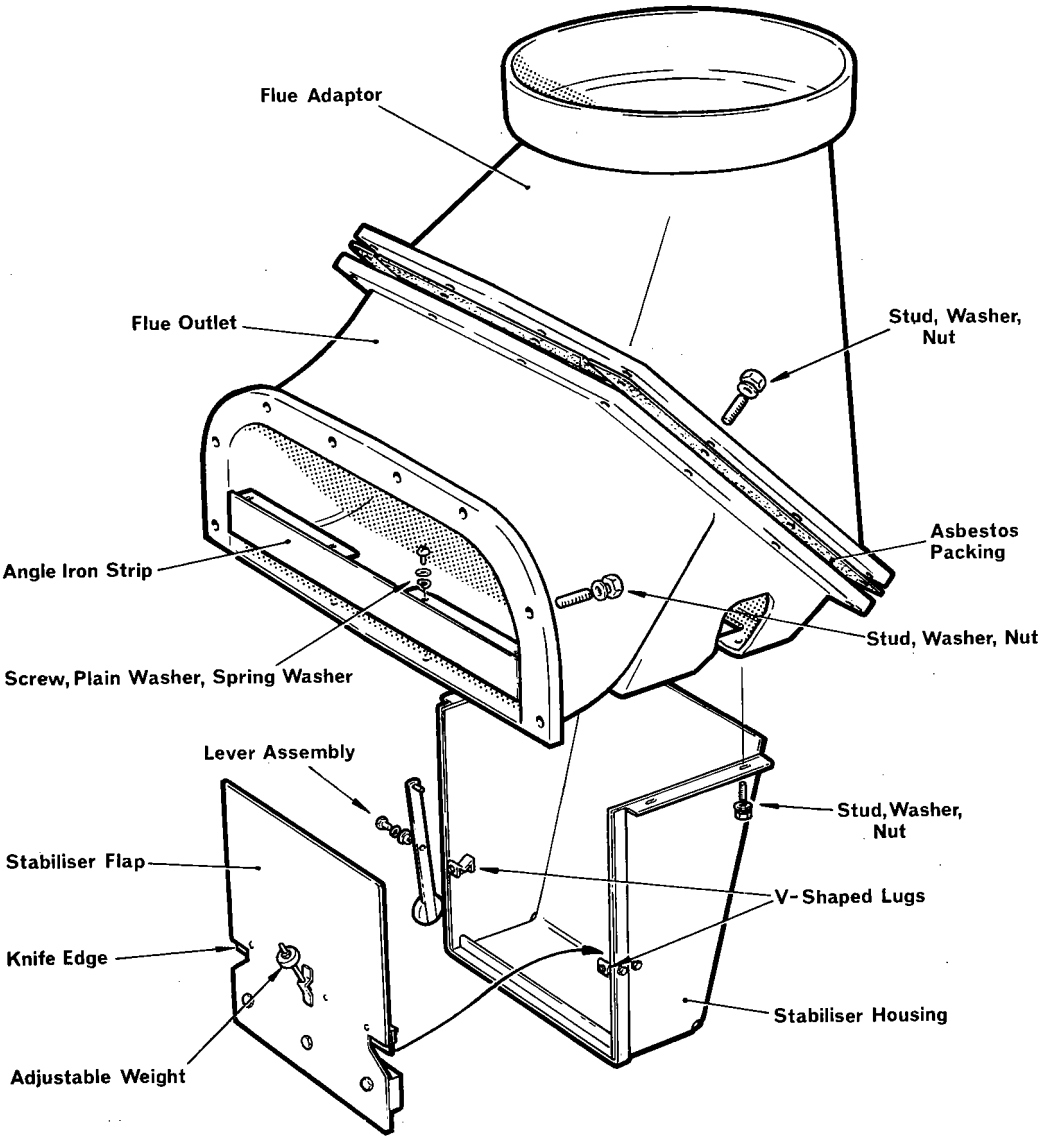

FLUEHOOD ERECTION
Fig. 5

opening with two $\frac{3}{8}$ in. Bsw nuts and washers, hand tightened. Rest the rear boiler plate on the angled shelf and hold it in position by means of a clamping strip at each side. These are secured by four $\frac{3}{8}$ in. Bsw wing nuts and washers, hand tightened. Lift the boiler plate and angled shelf so that the upper edge of the plate touches the flue offtake and covers the angle iron strip. Tighten the nuts holding the shelf and clamping strips.

Fit the angled shelf to the front waterway section and secure it with two $\frac{3}{8}$ in. Bsw nuts and washers, hand tightened. Place the upper front boiler plate on the shelf and hold it in position with clamping strips as previously described. Raise or lower the boiler plate and shelf until the flueway aperture is completely covered, then tighten all the nuts.

Run a fillet of boiler sealing compound into the recess around the outside of the combustion chamber opening. Position the pre-formed front wall with the five cut-outs around the combustion chamber opening and place the burner adaptor plate over the studs before securing with $\frac{3}{8}$ in. Bsw nuts and washers. Smooth off any surplus sealing compound around the plate.

1.3 THERMOSTAT

Fit the boiler thermostat into its pocket in the front waterway section. Run the Pyrotenax cable across the front of the boiler towards the right-hand side. With a gradual bend follow the contours of the section until the socket on the end of the cable remote from the thermostat is located at the bottom right-hand side of the front boiler section.

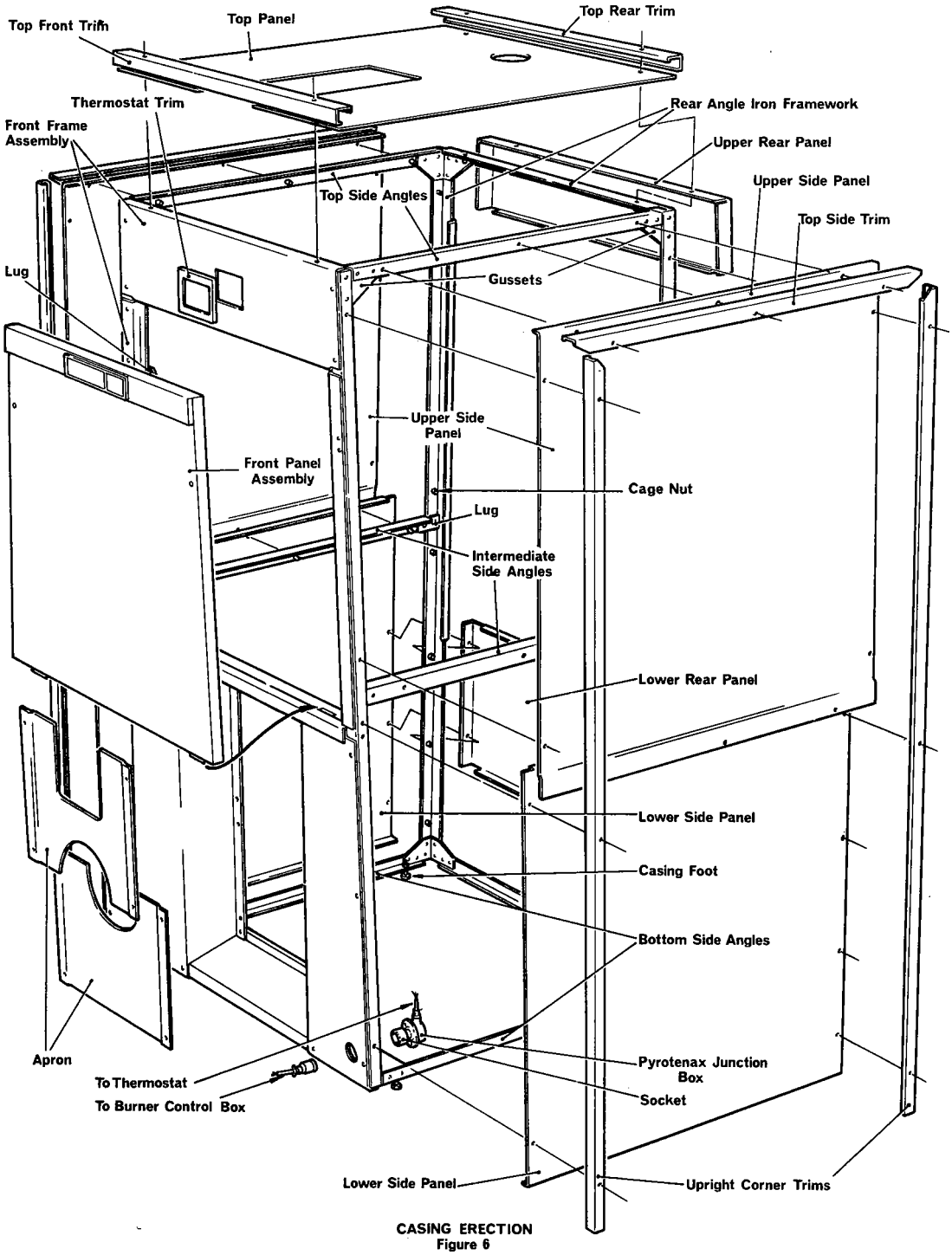

CASING ERECTION
Figure 6

CASING

The boiler casing should be assembled in accordance with the following instructions. All nuts should be finger tightened only to allow for lining up during assembly.

4.1 Rear Angle-Iron Frame

For ease of packing, this framework has been pre-assembled at Works and gives an indication of the final layout. On boilers where the flue and return connections have not been made, lift the complete framework over the flue outlet socket and place it against the rear waterway section so that the gussets at the top and bottom of the top uprights point towards the front of the boiler.

Where the flue and/or return connections have been made, either of the two following methods may be used to position the rear frame:-

(a) Where there is sufficient room on either side of the boiler, remove the left or right-hand upright and slide the framework into position with the top angle-iron over the flue offtake and the bottom angle-iron below the return connections. Replace the upright.

(b) Where there is insufficient room on either side of the boiler, remove the top and bottom angle-irons. Place the two uprights in position against the rear waterway section and re-assemble the top angle-iron above the flue offtake and the bottom angle-iron below the return connections.

4.2 Front Frame Assembly

Place the front frame assembly against the front of the boiler with the rectangular cut-out in the top panel located over the boiler thermostat.

4.3 Side Angle-Irons

For easy assembly, the points where the side angle-irons meet the front frame are colour coded as follows:-

(a) bottom left	black
(b) bottom right	green
(c) top left	red
(d) top right	yellow
(e) intermediate left	blue
(f) intermediate right	white

The side angle-irons measure :-

Eden 600	$27\frac{3}{4}$ in.
" 750	$33\frac{7}{8}$ in.
" 900	40 in.
" 1050	$46\frac{1}{8}$ in.
" 1200	$52\frac{1}{4}$ in.

and are assembled as follows :-

(a) Bottom left and right-hand sides. Screw the angle-irons to the gussets on the front and rear uprights (the coloured ends should be at the front) using two $\frac{1}{4}$ in. Bsw csk. head screws $\frac{3}{8}$ in. long with nuts and washers on each gusset. The two $\frac{1}{2}$ in. Bsw hex. head set screws $1\frac{3}{4}$ in. long on each angle-iron form the casing feet and should be adjusted to give 1 in. clearance between the bottom of the casing and the floor.

(b) Top left and right-hand sides. Assemble as described (the coloured ends should be at the front).

(c) Intermediate left and right-hand sides. Screw these angle-irons to the lugs half way down the uprights (the coloured ends should be at the front) using one $\frac{1}{4}$ in. Bsw csk. head screw $\frac{3}{8}$ in. long at each end.

(d) Check that the whole framework is in line and fully tighten all the nuts.

1.4.4 Thermostat Socket

Fit the thermostat socket. As previously mentioned, this is made on to the end of the Pyrotenax cable remote from the thermostat. The socket is fitted to the inside of the front frame, at the bottom right-hand corner where a gusset is provided. Push the socket into the hole in the gusset and secure with three 3/16 in. Bsw round head screws $\frac{3}{8}$ in. long, and shakeproof washers.

1.4.5 Spire Cage Nuts

These should be pushed firmly into the $\frac{3}{8}$ in. diameter holes around the framework.

1.4.6 Rear Side and Top Panels

The side panels have been colour coded on the inside of the front corners. These colours are identical with those on the front uprights and side angle-irons as described in Section 1.4.3 and should line up during assembly.

(a) Rear Panels

Place the upper rear panel in position with its top flange resting on the top cross angle-iron. Place the lower rear panel in position. Due to the tapering of the rear uprights, the lower panel will stay in position without further assistance.

(b) Side Panels

Fit the lower side panel. This has four $\frac{3}{8}$ in. diameter holes drilled down each side, and three $\frac{1}{2}$ in. diameter holes along the top. Place the panel in position so that its return flange at the top rests in the intermediate side angle-iron. At the rear, line up the common holes in the side panel, the lower rear panel and upright and secure with two $\frac{1}{4}$ in. Bsw mushroom head screws $\frac{3}{4}$ in. long.

Repeat on the other side of the framework. Fit the upper side panel. This has two $\frac{3}{8}$ in. Bsw diameter holes on each side, three along the top and three along the raised lip at the bottom. Place the panel in position so that the flange at the top rests on the top side angle-iron. To hold the panel temporarily, screw one $\frac{1}{4}$in. Bsw mushroom head screw 1 in. long, hand tight, into the top centre hole. Line up the remaining holes with those in the angle-irons. Into the three bottom and two lower side holes, screw $\frac{1}{4}$ in. Bsw mushroom head screws $\frac{3}{4}$ in. long.

Repeat on the other side of the framework.

(c) Top Panel

Place the top panel on top of the framework with the cut-out located at the front. Line up the holes at the front and rear.

1.4.7 Front Panel and Apron

Locate the removable front panel by sliding the two tongues at the bottom into the corresponding slots in the cross brace and secure the panel with two $\frac{1}{4}$ in. Bsw screws.

The black enamelled apron is fitted over the sighting door and burner adaptor and secured with eight $\frac{1}{4}$ in. Bsw x $\frac{3}{4}$ in. long screws.

1.4.8 Trims

Fit the upright corner trims. The front right hand and rear left hand trims are common, as are the front left hand and rear right hand. The screw holes are at the side of each trim and the top side is cut away at an angle.

Fit each corner trim with three $\frac{1}{4}$ in. Bsw mushroom head screws 1 in. long. The upper screws at the rear also hold the upper rear panel in position.

Fit the top side trims. These have an angled cut-away at each end and the screw holes are at the side. Remove the screw temporarily fitted in the top centre hole of each upper side panel. Secure each top trim with three $\frac{1}{4}$ in. Bsw mushroom head screws 1 in. long.

Fit the top front and rear trims with the screw holes on top. Secure with $\frac{1}{4}$ in. Bsw mushroom head screws 1 in. long. The screws through the rear trim also hold the rear upper panel in position.

BURNER INSTALLATION

2.1 BURNER

Eden gas-fired boilers are supplied with Landon Kingsway "Whirlpower" Forced Draught burners. Eden 600 boilers are fired by the model 85 MG burner and 750-1200 boilers by the model 100 MG. Burners are supplied fully assembled and pre-wired. Before installing, check that the correct type of burner has been supplied with the boiler.

2.2 GAS CONTROLS

The various gas controls for the burner are supplied connected together to form a manifold which can be supplied for either left or right-hand assembly according to the customer's requirements. The controls are as follows:-

1. Pilot Governor.	$\frac{1}{4}$ in. Bsp Jeavons, spring loaded.
2. Pilot Valve.	$\frac{1}{4}$ in. Bsp Black, type 5702, solenoid operated.
3. Main Gas Governor.	2 in. Bsp Jeavons (Eden 600-900) $2\frac{1}{2}$ in. Bsp Donkin or Peebles (Eden 1050-1200)
4. Safety Shut-off Valve.	ITT General Controls Hydramotor type HO.

Eden 600	2 in.size
" 750	$1\frac{1}{2}$in. "
" 900	2 in. "
" 1050 - 1200	3 in. "

The manifold is connected to the burner by two unions, one on the main gas supply line and the other on the pilot line, and supported by a bracket.

2.3 ASSEMBLY AND SETTING UP PROCEDURE

(a) Check that the correct size choke ring has been fitted on the draught tube (see Table 3).

(b) Check the setting of the firing head and adjust where necessary. (see Figures 7 and 7A).

(c) 85MG Burner only - fit the burner to the boiler by bolting the burner flange to the burner plate adaptor and securing firmly. Use the $\frac{1}{4}$ in. thick burner mounting gasket supplied to provide a complete seal between the two faces.

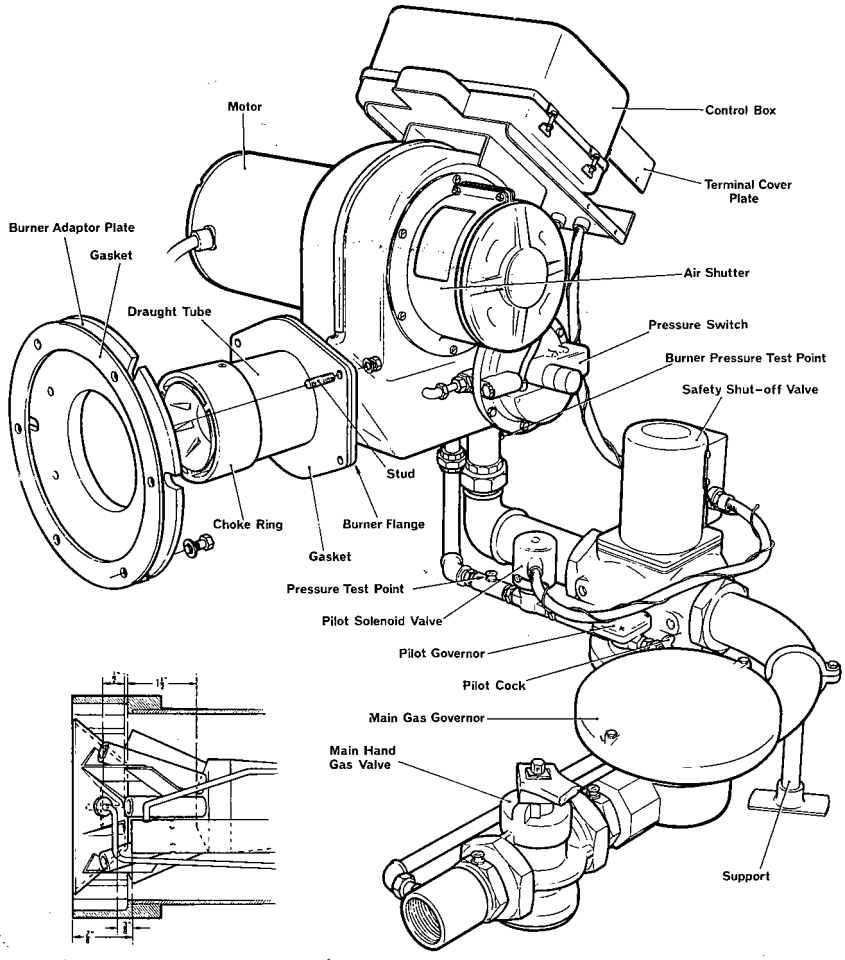

85 M.G. BURNER AND MANIFOLD INSTALLATION
FIGURE 7

100MG Burner only - locate two $\frac{1}{4}$ in. gaskets and the $\frac{1}{2}$ in. burner adaptor plate on the six studs projecting from the lower front boiler plate, the adaptor plate being placed between the gaskets. Fit the burner over the six studs and secure firmly.

(d) Fit the manifold to the burner and fully tighten the union. Support the manifold with the bracket provided.

(e) Connect the electrical supply to the control box on the burner, line to terminal L, neutral to terminal N and earth to terminal E. The final 24-30 inches of the cable should be encased in flexible conduit for ease of movement during maintenance, and a double-pole isolating switch and suitable HRC fuse should be incorporated in the supply line.

On the 85MG burner, the pilot solenoid valve should be connected to terminals 5 and 3 on the control box.

On the 100MG burner, the pilot solenoid valve should be connected to the terminals marked 17 and 18 and the hydramotor to terminals 7 and 17.

Plug the thermostat lead into the socket at the base of the boiler.

(f) 85MG burner only - connect an 0-6in. w.g. pressure gauge to the tapping on the main gas supply line at the entrance to the burner casing.

100MG burner only - connect an 0-6in. w.g. pressure gauge to the tapping on the burner draught tube.

(g) Connect an 0-6in. w.g. pressure gauge to the tapping on the pilot supply line nearest to the burner.

(h) Remove the cover from the main gas governor. Remove the packing washers and insert the lighter weights only from those supplied. Further adjustment may be necessary, see para 2.4.4.

(i) Set the air inlet control so that it is approximately half open. The air volume is regulated by the three shutters located around the air regulator ring.

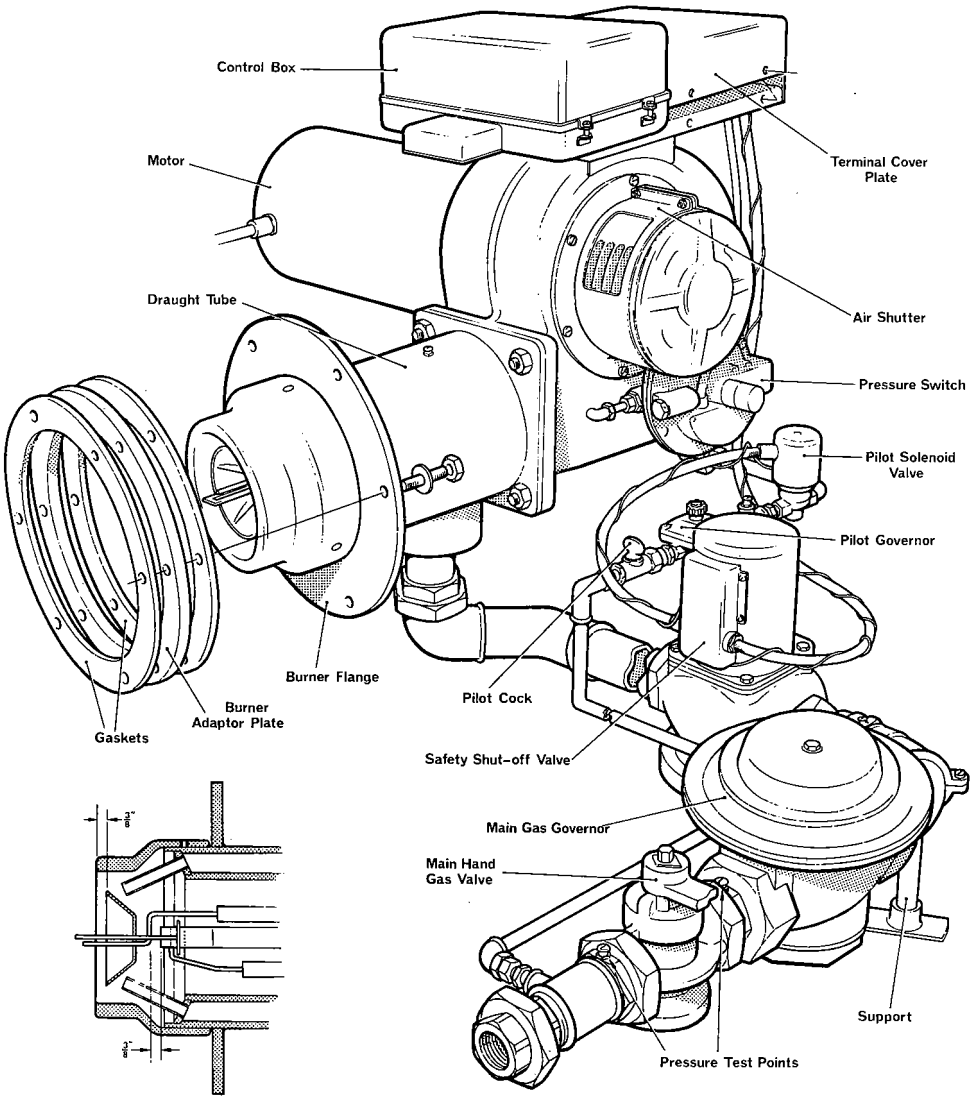

100 MG BURNER AND MANIFOLD INSTALLATION
FIGURE 7A

TABLE 3—BURNER DATA

EDEN		600	750	900	1050	1200
Choke ring dia. in		4.13/32	$5\frac{1}{4}$	$5\frac{1}{4}$	$5\frac{1}{2}$	$5\frac{1}{2}$
Gas rate-cu.ft/h		1560	1950	2340	2730	3120
Main burner pressure-in. w.g.	G.3	1.36	.85	1.25	1.2	1.55
	G.4	1.5	.95	1.45	1.4	1.8
	G.5	1.64	1.15	1.65	1.6	2.05
Pilot pressure-in. w.g.	G.3	2.1	.9	1.2	1.0	1.2
	G.4	2.4	1.0	1.3	1.1	1.3
	G.5	2.7	1.1	1.4	1.2	1.4
Air back pressure-in. w.g.		.63	.21	.34	.18	.26
Boiler flue size-dia. in.		10	10	12	12	12

2.4 FIRING THE BURNER

2.4.1 Starting the Burner

(a) Check the gas group for which the appliance is being used.

(b) Make sure that all air is purged from the main gas supply line.

(c) Make sure that the main hand gas valve is closed and the pilot cock is open. Test for gas leaks.

(d) Set the boiler thermostat to the required temperature.

(e) Remove the terminal cover plate from the RAI control box and disconnect the wire from terminal 11 and reconnect it to terminal 5. This is a temporary modification which will allow the pilot to be alight continuously and thus permit the pilot gas pressure to be set correctly.

(f) Switch on the electrical supply and wait for the burner fan to start running.

2.4.2 Air Shutter Setting

During the fan purge period (see Burner Starting Sequence, para 2.5(c), adjust the air shutter to give the back pressure recommended in Table 3. This is measured by the pressure gauge connected to the pressure point on the burner draught tube (on 100MG burners) or on the main gas supply line at the entrance to the burner casing (on 85MG burners).

2.4.3 Pilot Pressure Setting

Once the pilot flame is established, set the pilot gas pressure to the recommended value in Table 3 by adjusting the pilot governor. The pilot gas pressure is measured by the pressure gauge connected to the pressure test point nearest to the burner on the pilot supply line. (Note:- if the burner locks out before the pilot is established it may be due to the pressure of air in the pilot line. The lock-out button should be pressed and several starts attempted to ensure full purging of the pilot line).

Switch off the electrical supply to the burner at the mains and disconnect the wire from terminal 5 in the control box and reconnect it to terminal 11. Switch on the electrical supply. After a delay of up to $1\frac{1}{2}$ minutes, the burner will commence its starting sequence again. The main hand gas valve is closed and thus, during this next starting sequence, there will be no main flame to be sensed by the ionising probe and the burner pilot will therefore ignite and run to lock-out. Restart the burner by pressing the red lock-out button on the control box. This completes the setting of the pilot. (Note:- the pilot flame may be viewed through the sighting glass provided on the front of the burner).

2.4.4 Main Burner Pressure Setting

Open the main hand gas valve and press the lock-out button. When the main flame is established, set the burner pressure to the recommended value in Table 3, by adding or removing weights from the main gas governor. The burner pressure is measured as described in section 2.4.2.

2.4.5 Flue Draught

Adjust the weight on the screw thread attached to the stabiliser until a flue draught of 0.03 in. w.g. is obtained. Manually move the stabiliser flap to its fully open position and release it when it should return to the controlling position.

2.4.6 Oxygen Concentration

Measure the oxygen concentration in the primary flue hood by inserting horizontally to a depth of 4 inches, a gas sampling probe in the hole provided on the left-hand side of the flue offtake. Allow the boiler to run for 30 minutes. Check the readings and adjust the air shutter until the oxygen concentration is $5\text{-}5\frac{1}{2}\%$ by volume. Finally, check the gas rate on the site meter (ensuring that no other gas appliances are functioning on the same meter).

2.4.7 Optimum Operating Conditions

Performance figures for optimum operating conditions are as follows:-

Flue temperature	$550^{\circ}F$
O_2	5%
CO not more than	.005%
Flue hood draught	.03 in. w.g.

2.4.8 Final Control Check

With the burner firing on main flame, close the main hand gas valve. This simulates

main flame failure and should result in burner lock-out. Once satisfactory lock-out occurs, open the main valve and press the lock-out button.

2.4.9 Pressure Switch Setting

When the burner is firing normally, the air pressure switch should be set. Remove the domed cap and adjust the setting screw clockwise to the point where lockout occurs. Turn the screw anti-clockwise for six complete turns, replace the cap and restart the burner by pressing the lockout button.

2.5 BURNER STARTING SEQUENCE

When the boiler thermostat calls for heat, the following sequence of events occurs :-

(a) The operating relay in the control box is energised and starts the timer motor. Current flows to terminal 3 and starts the burner fan.

(b) Air pressure operates the air pressure switch and current flows to terminal 4.

(c) After the fan has been running for 23 seconds (the fan purge period), current flows to terminal 6 and spark ignition is established. The pre-ignition period is 5 seconds during which spark and air are present but not gas.

(d) After this period, current flows to terminal 5, energising the pilot gas solenoid valve which opens and allows gas through to the pilot burner where it is ignited by the spark.

(e) Within 3 seconds, the flame rod senses the pilot flame and supplies an ionisation current to terminal 15 (D.C. of between 15 and 20 m.a. approx) which changes over the flame relay in the control box.

(f) After a further period of 16 seconds the ignition transformer is switched off.

(g) After a further period of 6 seconds, current flows through to terminal 7 opening the safety shut-off valve and allowing gas through to the main burner jet where it is ignited by the pilot flame (total time taken= 50 seconds).

(h) After a further period of 5 seconds, the pilot solenoid valve is de-energised leaving the main flame firing and sensed by the flame probe. The timer motor stops.

Note:- on a call for heat by manual control, time switch or low limit thermostat, the timer motor starts and runs for 45 seconds. At the end of this period the sequence commences as in (a). This also applies after an electrical failure.

2.6 SHUTTING-DOWN SEQUENCE

When the heat demand is satisfied, the thermostat opens circuit and the operating relay is de-energised. The safety shut-off valve closes and at the same time the fan stops running. The timer motor continues for a further 45 seconds and returns to the starting position.

In the event of a shut-down due to manual switching off of the electrical supply to the appliance, thermostat or time control, then the timer motor will not return to its starting position until the electrical supply is restored. If, at that time, heat is required, the control will go through a normal starting cycle.

Note:- in the event of the electrical supply failing at any time during that starting cycle, this will result in the complete shut-down of the burner. When the supply is re-established, the timer motor completes its cycle back to the starting position without energising any other equipment. The burner then fires in the correct sequence. In the event of the main gas supply failing, the flame sensing rod will cease to provide the current to operate the flame relay and the burner will go to lockout.

2.7 OPTIONAL CONTROLS

Where applicable, the following installation instructions should be carried out:-

(a) Clock Control. This should be fitted in the main electrical supply to the control box (see Wiring Diagrams 2 and 5).

(b) Pump. No provision is made in the control box for controlling the pump. In cases where there is no gravity circulation, it is desirable to keep the pump running for a time after the boiler has shut down. This is to dissipate any residual heat in the boiler fabric and so prevent an excessive local temperature rise and possible lockout of the limit thermostat. A method of ensuring that the pump operates after the boiler has shut down is to wire in parallel with the time switch contact controlling the pump, a thermostat whose contact breaks circuit on a fall in temperature. This temperature can be of the clamp-on or immersion type and should be fitted in the system flow header as close to the boiler as possible. Control details are shown in Wiring Diagrams 3 and 6.

(c) Low Limit Protection. These controls should be wired in parallel with the clock control (see Wiring Diagrams 2 and 5). When the clock is off it will be overridden by the low limit controls and temperature control will be on the boiler thermostat. A method of low limit control is shown in Wiring Diagrams 3 and 6. An outdoor thermostat set at approximately 35°F is wired in parallel with the clock contact in the pump starter circuit. When the outdoor temperature falls, the pump will start running. An immersion type thermostat in the return main set at approximately 40°F, is wired in parallel with the clock contact controlling the burner control box. When the temperature falls, the burner will fire and both pump and burner will be operating. This method ensures the economical running of the boiler under low limit conditions.

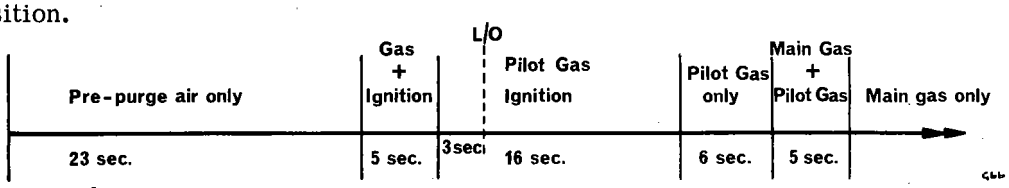

RAI 15 CONTROL BOX SEQUENCE
Figure 8

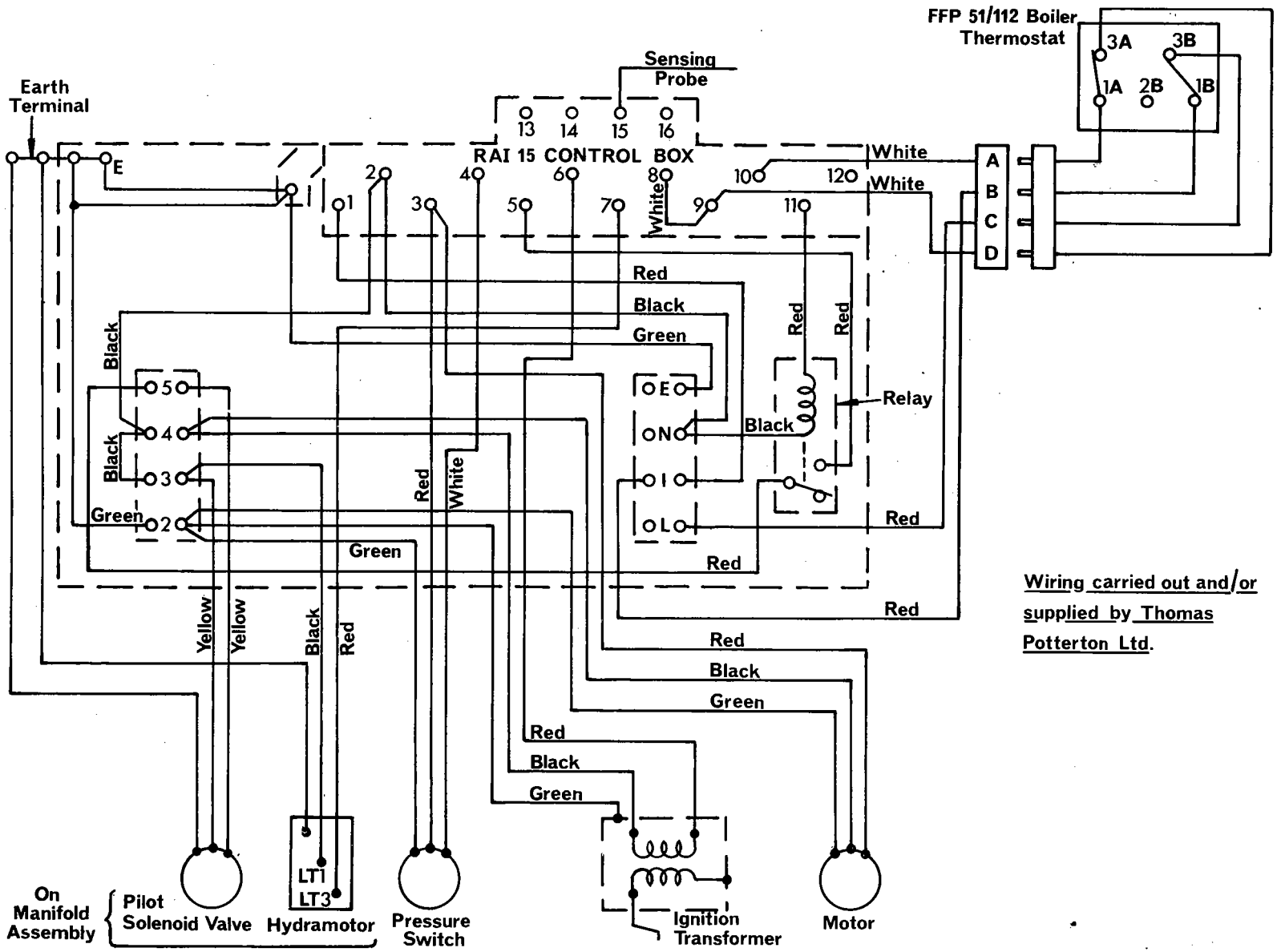

Wiring carried out and/or supplied by Thomas Potterton Ltd.

BOILER WIRING, 85 MG, SINGLE PHASE
Diagram 1

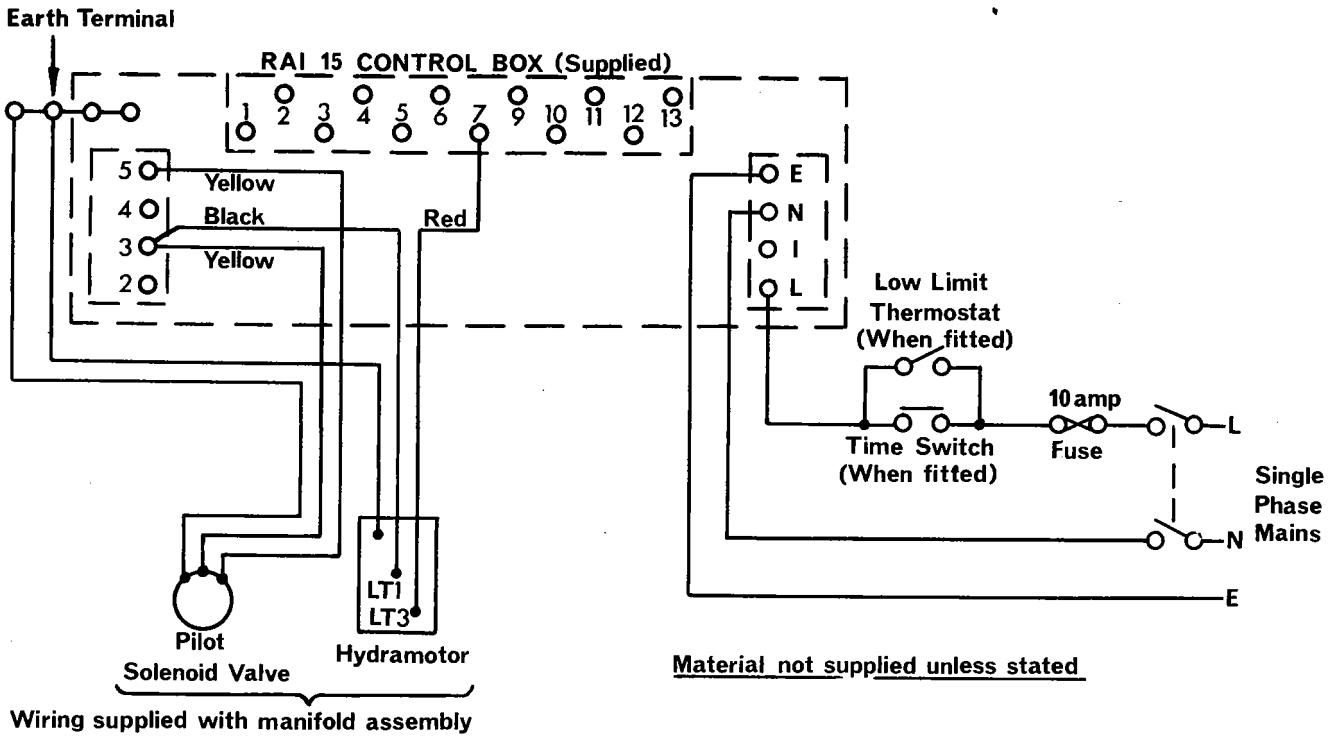

INSTALLERS WIRING, 85 MG, SINGLE PHASE
Diagram 2

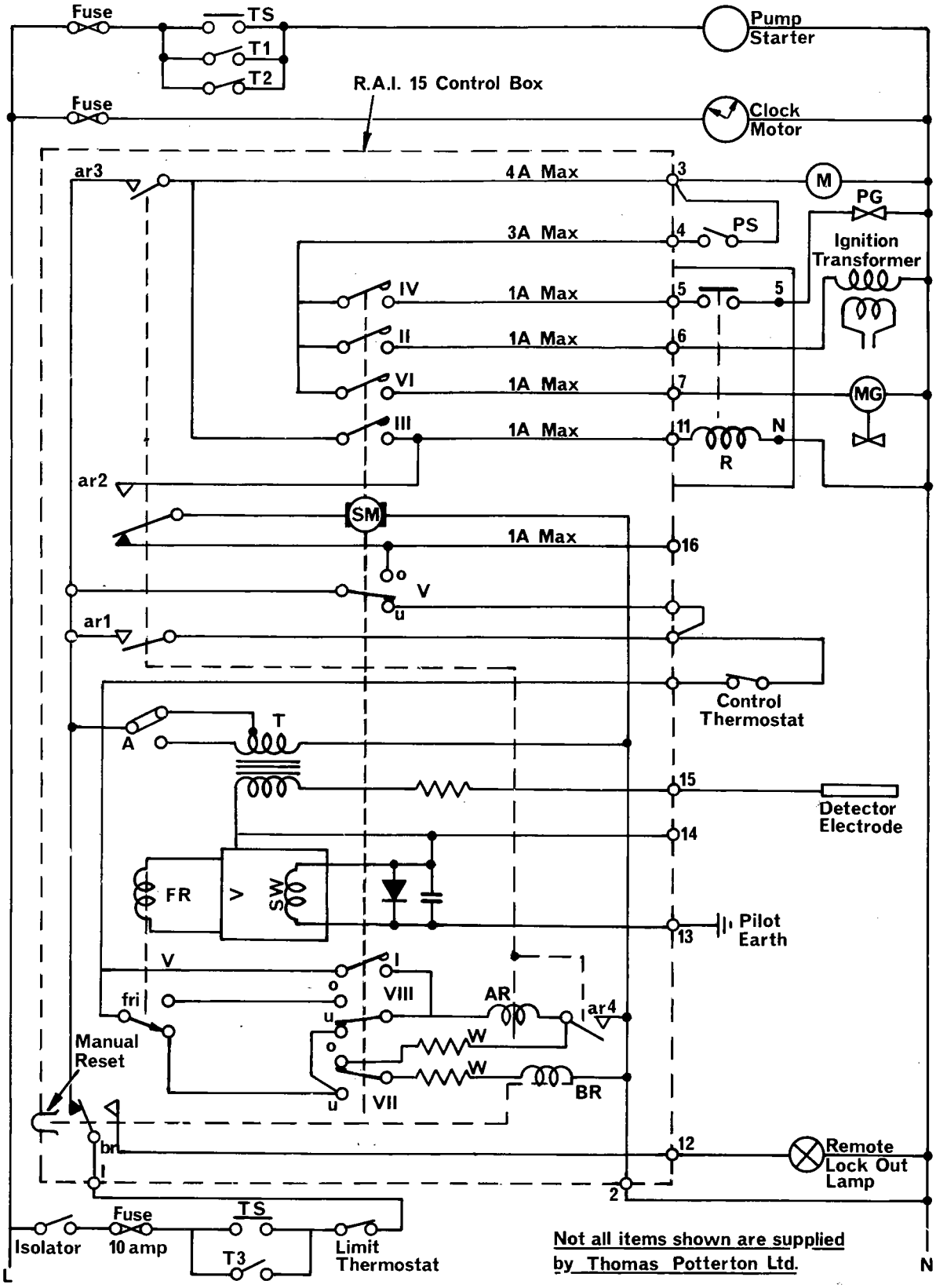

Not all items shown are supplied by Thomas Potterton Ltd.

Key:- TS	Time switch contacts	MG	Gas valve
T1	Low limit air thermostat (Break on rise)	PS	Pressure switch (N/O)
T2	Pump delay thermostat (Break on fall)	R	Pilot relay (N/O)
T3	Low limit immersion thermostat (Break on rise)	SM	Control synchronous motor
M	Burner motor	T	Transformer
PG	Pilot gas valve	FR	Flame failure relay

SCHEMATIC DIAGRAM, 85 MG. 220/240 Volts 50 Cycles AC
Diagram 3

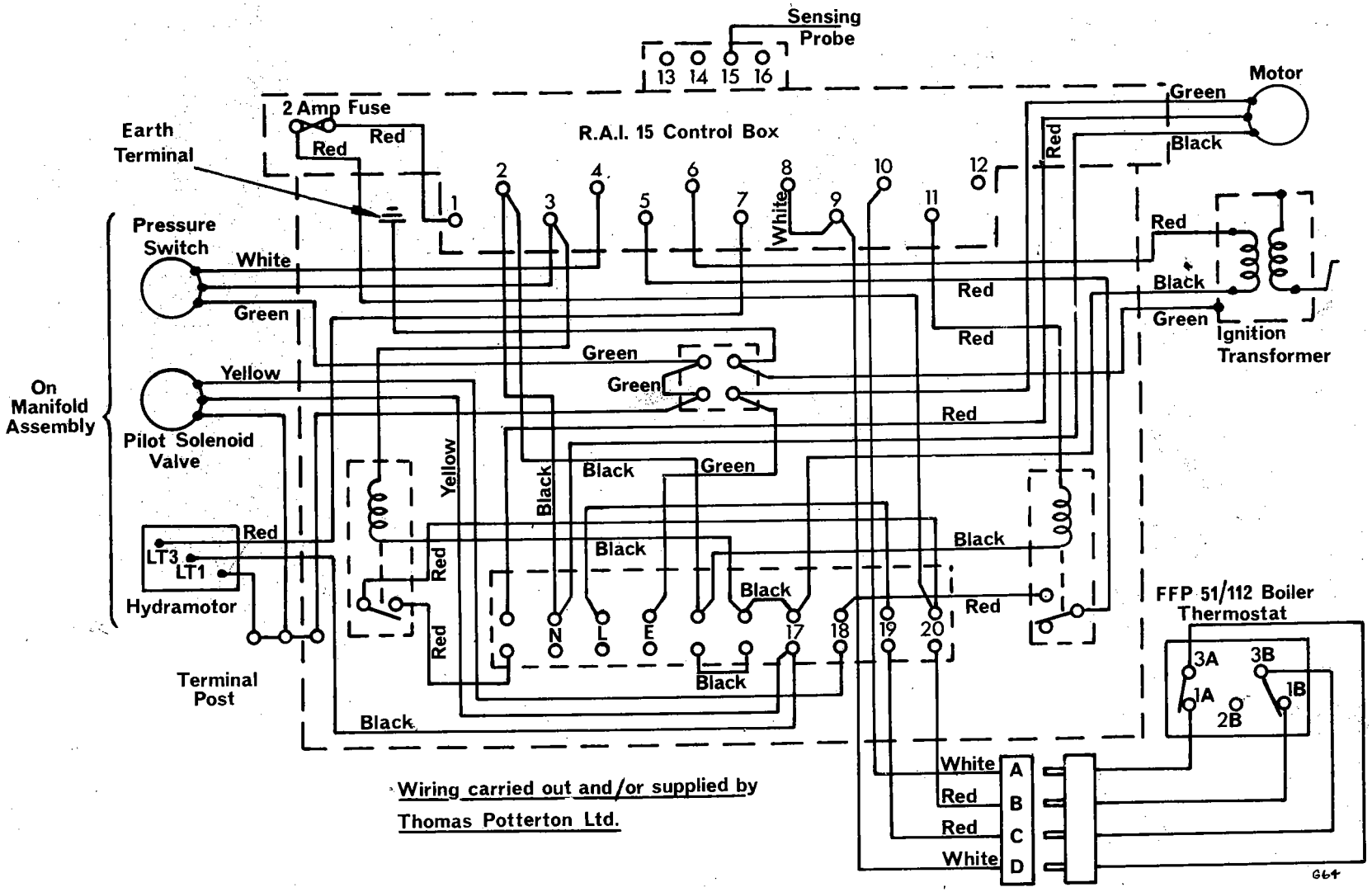

BOILER WIRING, 100 MG, SINGLE PHASE.
Diagram 4

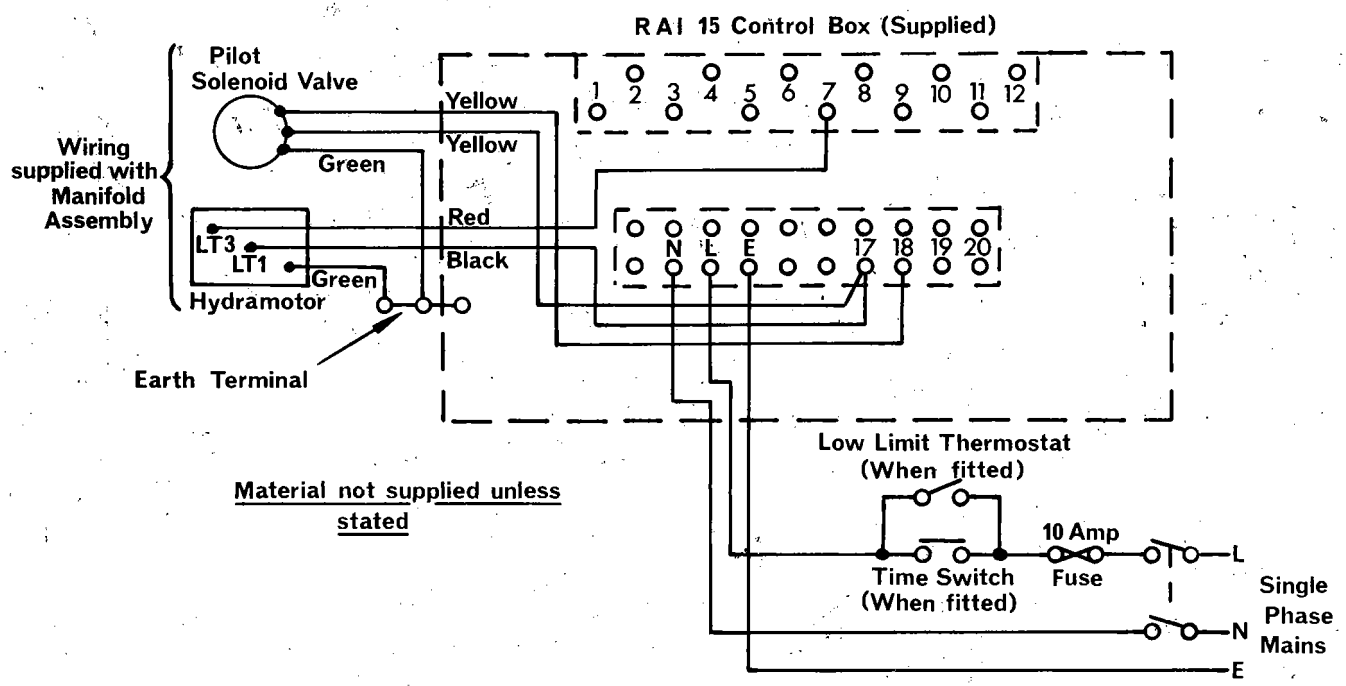

INSTALLERS WIRING, 100 MG, SINGLE PHASE
Diagram 5

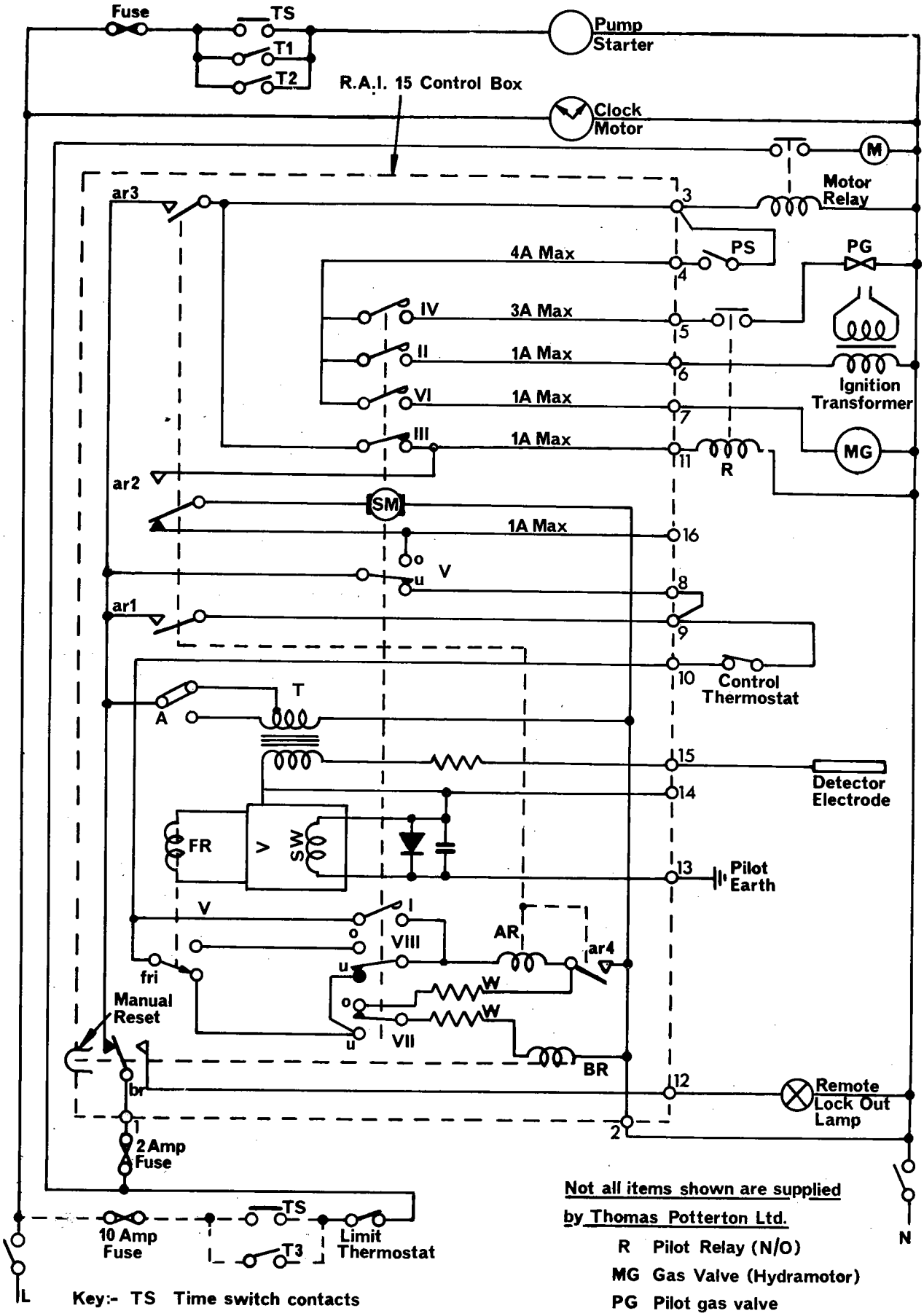

Not all items shown are supplied by Thomas Potterton Ltd.

R	Pilot Relay (N/O)
MG	Gas Valve (Hydramotor)
PG	Pilot gas valve
PS	Pressure switch (N/O)
SM	Control synchronous motor
T	Transformer
FR	Flame failure relay

Key:-

TS	Time switch contacts
T1	Low limit air thermostat (Break on rise)
T2	Pump delay thermostat (Break on fall)
T3	Low limit immersion thermostat (Break on rise)
M	Burner motor

SCHEMATIC DIAGRAM, 100 MG. 220/240 Volts 50 Cycles AC

Diagram 6

MAINTENANCE

3.1 GENERAL

The operating efficiency of the boiler depends on satisfactory chimney conditions, adequate air supply and correct burner adjustment. If initially commissioned as laid down in the previous section of this Manual, service visits should not be necessary more than twice a year.

3.2 SIX MONTHLY SERVICE

Before servicing the boiler, make sure that the electrical supply is switched off and also that the gas supply is turned off at the main.

Undo the nuts securing the burner to the burner plate adaptor and remove the burner from the boiler.

Now proceed to clean out the flueways. To carry out this operation effectively, an industrial type vacuum cleaner will be needed, together with the flue cleaning tools supplied with the boiler. Cover the burner with a cloth to prevent dirt and soot from falling onto it and

(a) remove the upper casing panel by unscrewing the two $\frac{1}{4}$ in. Bsw mushroom head screws, and lifting the panel upwards so that the tongues at the bottom of the panel lift clear of the slots in the cross brace.

(b) Loosen the four wing nuts in the clamping strips at each side of the front boiler plate. Move the strips outwards and remove the front boiler plate revealing the flueways.

(c) Clean all the flueways, using the brush, scraper and vacuum cleaner. Starting with the bottom cross tubes, scrape and brush off all foreign matter paying particular attention to the vertical surfaces between the cross tubes. One end of the scraper has been bent to a suitable angle for cleaning these surfaces.

(d) After each row of cross tubes has been cleaned, brush all the deposits down into the combustion chamber, and remove these through the lower front boiler plate using the vacuum cleaner.

(e) With the aid of a torch, examine the target wall at the rear of the combustion chamber through the burner hole in the lower front plate. If any repairs are necessary, remove the black apron from around the burner hole. Undo the nuts securing the lower front boiler plate and remove it. Lift out the pre-cast insulating wall to gain access to the combustion chamber and target wall. Repair any cracks with Peer "M" fireclay cement.

(f) Refit the pre-cast insulating wall so that the five cut-outs around its inner edge correspond with the lugs on the front section. Run a fillet of boiler sealing compound around the perimeter of the lower front plate and fit it in position over the studs, securing with nuts and washers. Replace the black apron.

(g) Remove the casing side panels and examine the joints between the boiler sections. If the boiler sealing compound is cracked it must be scraped out and fresh compound forced between the joints. Replace the side panels.

Check that the electrode setting on the burner is correct and that the firing head is free from dirt. The choke ring may be removed to view the electrodes by undoing the three Allen screws holding it in position. Make sure that the choke ring is replaced correctly. Remove any dirt which may have accumulated at the fan inlet grille, or in the draught tube around the main and pilot gas pipes. Lightly lubricate the fan motor if necessary. Refit the burner and carry out the tests as detailed in section 2.4 - "Firing the Burner".

FAULT FINDING

4.1 BURNER WILL NOT START

4.1.1 No electrical supply to the Burner

(a) Check the mains supply to terminals 1 and 2 in the control box.

(b) Check that the main switch is "ON"

(c) Check that the time switch (if fitted) is "ON"

(d) Check that the limit thermostat reset button is depressed.

(e) Check that the fuse has not blown.

(f) Check that connections between the main switch and the limit thermostat are in order.

4.1.2 Electrical supply is through to the Burner (terminals 1 and 2) but the timer motor will not start

(a) Check that the control thermostat is set to the desired temperature and is calling for heat.

(b) Check that the lockout button on the control box is depressed.

(c) Check connections to terminals 9 and 10 in the control box.

(d) Bridge terminals 9 and 10 and check whether the timer motor starts. If it does, check the connections to the control thermostat.

(e) Check the link between terminals 8 and 9.

(f) The control box may be faulty. Fit a new one and check result.

4.1.3 The timer motor runs but the control box cycles to lockout

(a) Depress the lockout button, wait for 70 seconds and check that electrical supply is available at terminal 3.

(b) If no supply is available at terminal 3, the control box may be faulty and should be changed.

(c) If supply is available, check the connections to the burner motor.

(d) If the connections are o.k. the motor may be faulty and should be changed.

4.2 BURNER MOTOR STARTS—NO IGNITION—CONTROL BOX LOCKS OUT

4.2.1 Depress the lockout button and, after waiting for 23 seconds after the burner motor starts, check that electrical supply is through to terminal 6.

4.2.2 (a) If no supply is available at terminal 6, check that it is available at terminal 4 during the fan running period (the 23 seconds).

(b) If there is no supply at terminal 4, check the electrical connections to the air pressure switch and also that it is correctly fitted. Check also that the fan is tight on the burner motor shaft and that, on commissioning, the air back pressure setting was correct. If, after this, there is still no supply at terminal 4, the air pressure switch may be faulty and should be changed.

(c) If supply is available at terminal 4, the control box may be faulty and should be changed.

4.2.3 (a) If supply is available at terminal 6, check the primary connections to the ignition transformer.

(b) Check that shorting is not occurring on the H.T. lead.

(c) Check that the electrode is positioned correctly and not damaged.

(d) The ignition transformer may be faulty and should be changed.

4.3 MOTOR RUNS AND SPARK IS PRESENT—PILOT WILL NOT LIGHT AND CONTROL BOX LOCKS OUT

4.3.1 Check that the pilot gas cock is turned on and gas is available.

4.3.2 On commissioning, air may still have been present in the gas line. Purge and re-cycle several times by depressing the lockout button.

4.3.3 After the fan has been running for 28 seconds, an audible "click" should be noticed when the pilot solenoid valve opens. If the valve does not open,

(a) Check the electrical supply at terminal 11 during the fan running period.

(b) If there is no supply at terminal 11, the control box may be faulty and should be changed.

(c) If supply is available, check the connections to the external relay and make sure that it is closing.

(d) 28 seconds after the burner motor starts, check that supply is present at terminal 5.

(e) If there is no supply at terminal 5, the control box may be faulty and should be changed.

(f) If supply is available, check the connections to the relay switch and solenoid valve.

(g) Check the supply on each side of the relay switch, if there is no supply on the valve side, the relay is faulty. If supply is available, the solenoid is faulty and should be changed.

4.3.4 If the pilot solenoid valve opens,

(a) Check that the pilot pressure setting is correct.

(b) Check that the pilot orifice is not clogged.

4.4 PILOT LIGHTS BUT DOES NOT BECOME ESTABLISHED—CONTROL BOX LOCKS OUT

4.4.1 Disconnect the wire from terminal 15 and connect a D.C. micro-ammeter into the circuit with the positive terminal connected to terminal 15.

4.4.2 Check that the sensitivity link in the control box is open and depress the lockout button.

4.4.3 If the current reading is zero 28 seconds after the burner motor has started to run.

(a) Check that the burner firing head is satisfactory.

(b) Check that the flame sensing probe is not damaged and change if necessary.

(c) Check that the voltage between terminals 14 and 15 is 70 volts a.c.

(d) If all these are o.k. and the current reading is still zero, the control box may be faulty and should be changed.

4.4.4 If the current reading is less than 12 micro-amps,

(a) The flame sensing probe may need adjustment.

(b) The probe may have carbon deposit and should be cleaned.

(c) The mains voltage may be low-adjust voltage selector.

4.4.5 If the current reading is greater than 12 micro-amps and the pilot still refuses to become established, the control box may be faulty and should be changed.

4.5 PILOT LIGHTS BUT MAIN FLAME DOES NOT FIRE—CONTROL BOX LOCKS OUT

4.5.1 Check that the main hand gas valve is open.

4.5.2 Check that the safety shut-off valve opens 50 seconds after the burner motor starts. Opening and closing of this valve is audible and visible.

4.5.3 If the safety shut-off valve does not open

(a) Check the electrical supply at terminal 7.

(b) If there is no supply at terminal 7, the control box may be faulty and should be changed.

(c) If supply is available, check the connections to the valve.

(d) If these are in order, the valve may be faulty and should be changed.

4.5.4 Check that the main gas governor is loaded correctly.

4.5.5 Check that the main gas pressure is above the minimum stated in Table 3 (see SECTION 2).

4.6 MAIN FLAME FIRES BUT FAILS WHEN PILOT GOES OUT

The pilot flame goes out 55 seconds after the burner motor starts. The flame sensing probe is detecting the pilot flame but not the main flame.

4.6.1 Check the position of the probe.

4.6.2 Check that the probe is not damaged.

4.6.3 Check that the correct size burner choke ring is fitted (see Table 3 in SECTION 2).

CONTENTS

Page No.

ILLUSTRATIONS

WIRING DIAGRAMS

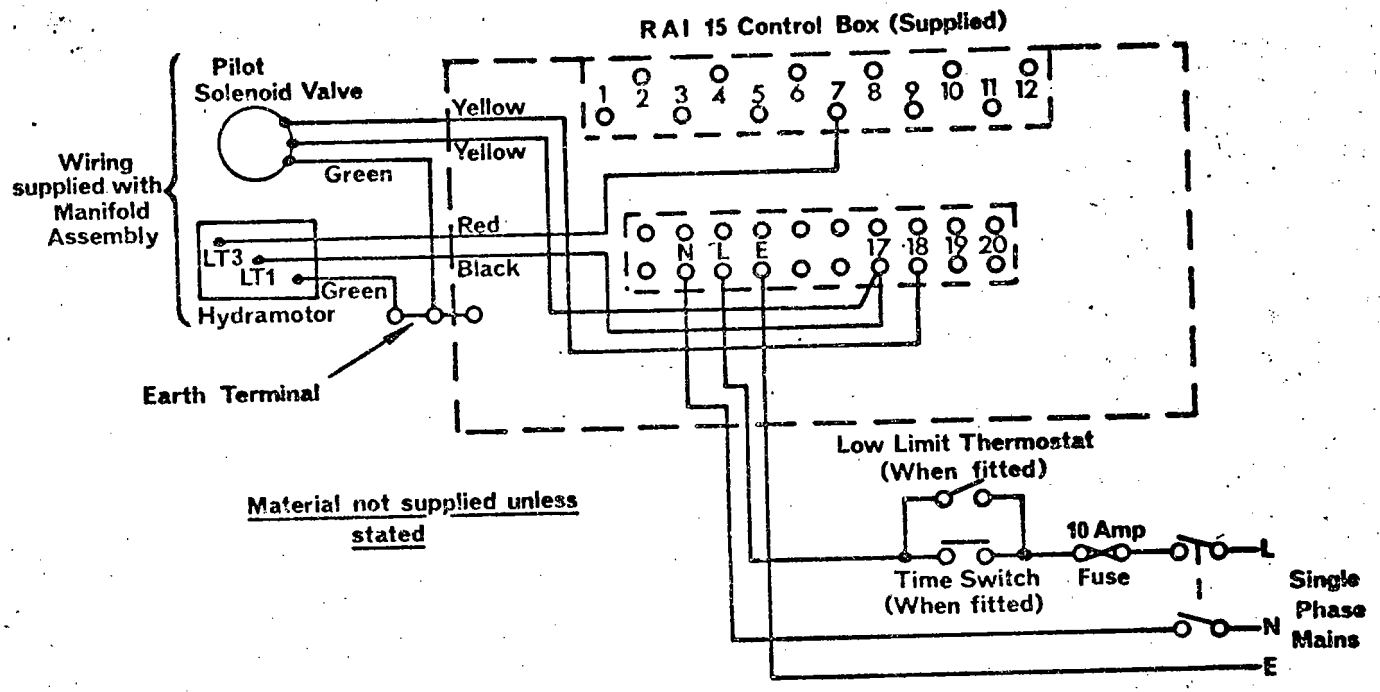

INSTALLERS WIRING, 100 MG, SINGLE PHASE
Diagram 5

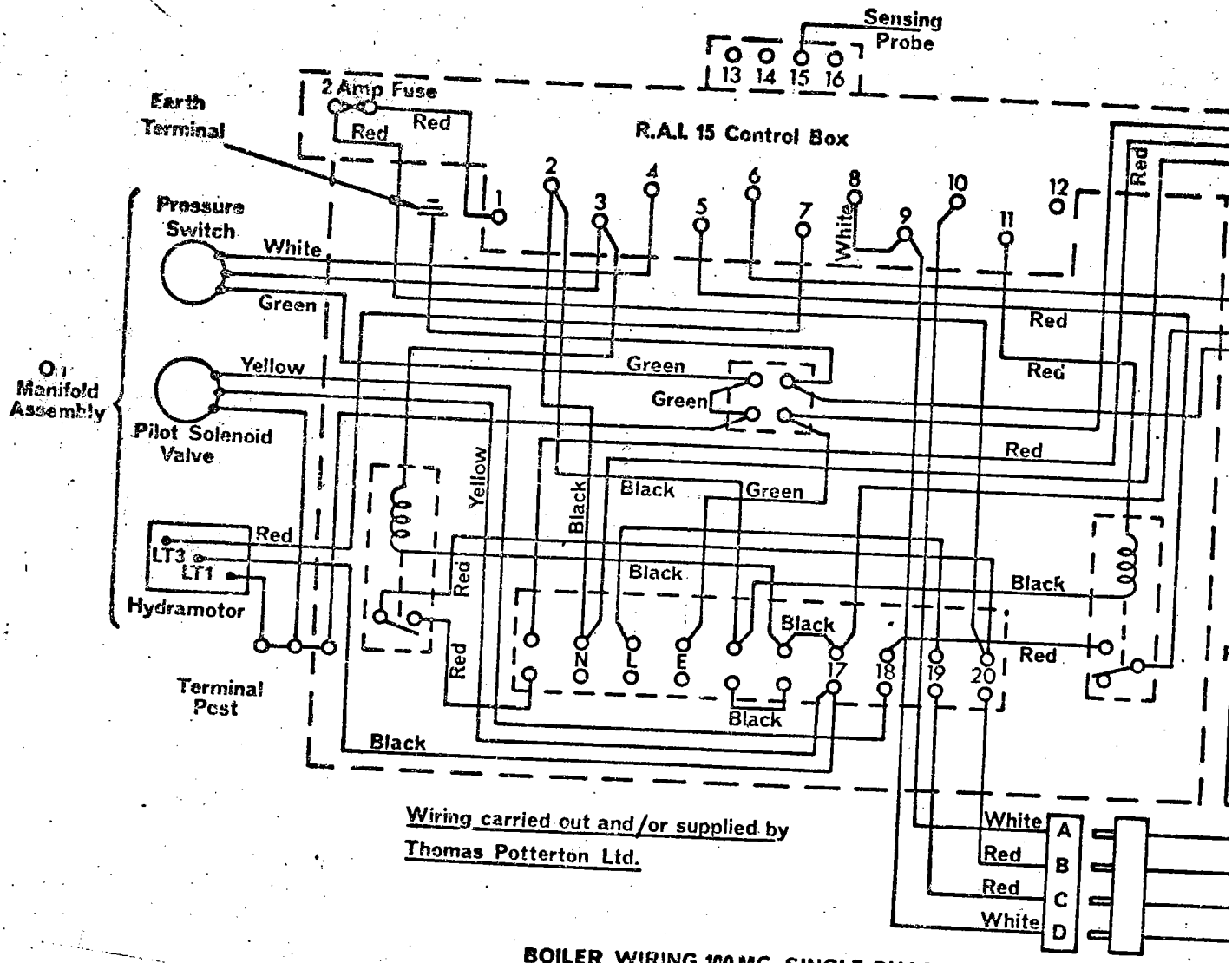

Wiring carried out and/or supplied by Thomas Potterton Ltd.

BOILER WIRING, 100 MG, SINGLE PHASE.
Diagram 4